MAX. OUTPUT TORQUE [FT.LB]	MAX. STEM DIAMETER W/ PROTECTOR [IN]	MAX. STEM DIAMETER W/O STEM PROTECTOR [IN]	RATIO	MIN. MOUNTING DIAMETER [IN]	MAX. MOUNTING DIAMETER [IN]	WEIGHT [LBS]	HANDWHEEL SIZE [IN]
2000	Ø3.950	Ø4.125	4.07:1	Ø6.75	Ø11.00	72	Ø24

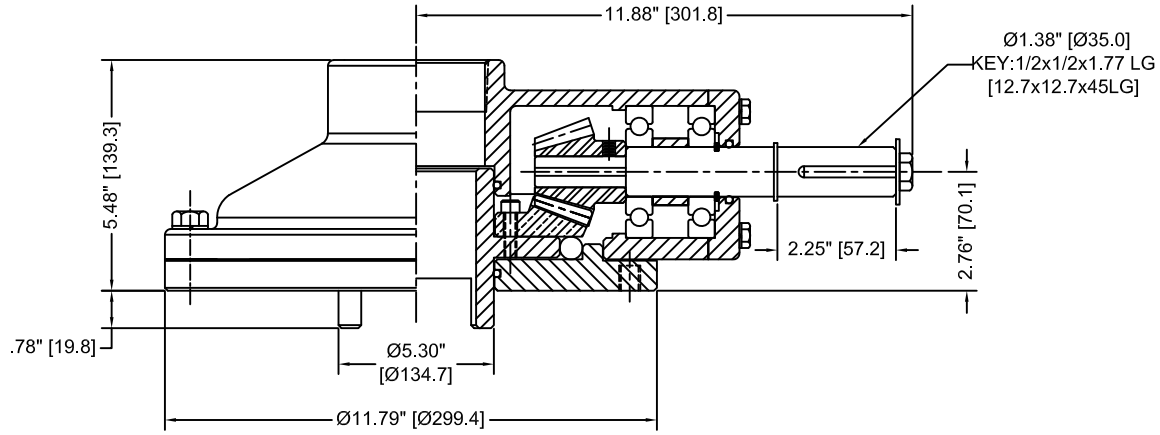

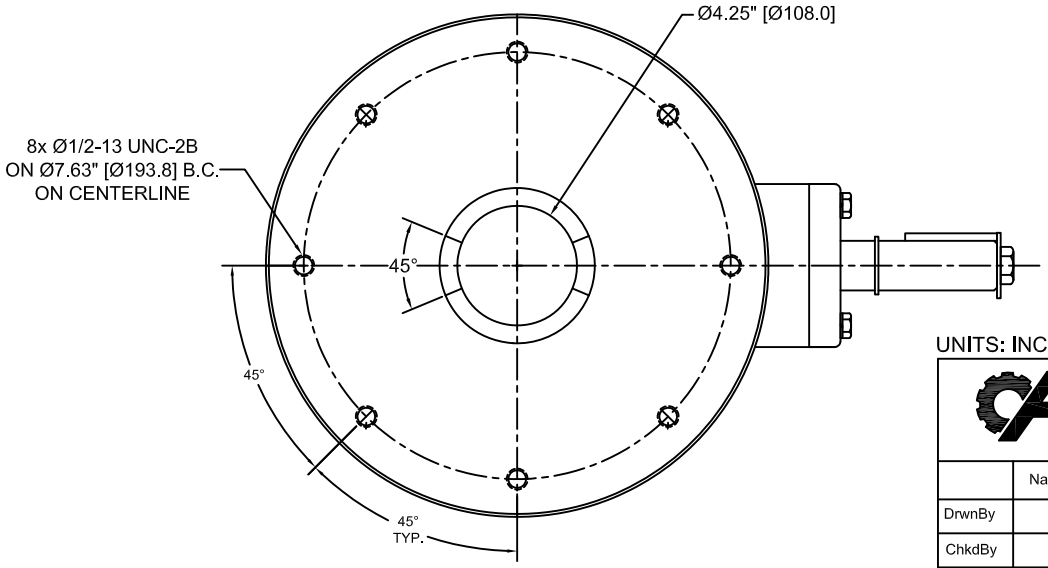

UNITS: INCH [MM]

Advanced Industrial Technologies
7721 Bluff Point Drive
Houston Texas U.S.A. 77086
Phone: 832-855-3033
Fax: 281-880-8061

	Name	Date
DrwnBy	JM	11/28/18
ChkdBy	KN	11/28/18
ApvdBy	KH	11/28/18

MODEL: AITB207
BEVEL GEAR

DRAWING NUMBER: AITB207
REV. 0

DO NOT SCALE DRAWING | SHEET 1 OF 1 | DWG. SIZE : A3

107B